DATA SHEET

DATA DISPLAY GROUP

Model: **INLine 400 IQ i3**

Order no.: **091123**

Display	
Size:	101,6 cm (40")
Type:	Samsung Digital Information Display (DID) TFT LCD
Resolution:	1920 x 1080 pixel FHD
Display Colors:	16,7M (true color)
Brightness (typ.):	450 cd
Contrast Ratio (typ.):	3000:1
Response Time (typ.):	8ms Tf
Viewing Angle (typ.):	178 deg. horizontal, 178 deg. Vertical
Display Area:	885.6 (H) x 498.15 (V)mm
Number of Backlights:	12 CCFTs
Pixel class:	ISO 13406-2
Operating Lifetime (typ.):	50% of original brightness after 50.000 hrs.

System	
CPU	
Processor:	Intel® Core™ i3 series
Socket:	rPGA 988A
System Bus:	800MHz /1066MHz
Chipset	Intel® QM57 Ibex Peak-M PCH
System Memory	
Size:	4GB PC3-8500 (DDR3 1066MHZ)
Sockets:	Two 240-pin DDR3 S0DIMM
Graphic Features	
Graphic Chip:	Intel® Gen5.75 integrated graphics engine
Graphic Memory:	256MB
Onboard Audio Features	
Audio Chip:	Realtek ALC262 2-channel High Definition Audio
Onboard LAN Features	
LAN1 Chip:	Intel 82577LM with iAMT6.0 Gigabit LAN Phy
LAN2 Chip:	Realtek RTL8111C PCI Express Gigabit controllers
HDD	
Size:	250 GB, 24/7 reliability
Bus:	SATA 2

DATA SHEET

DATA DISPLAY GROUP

Connections

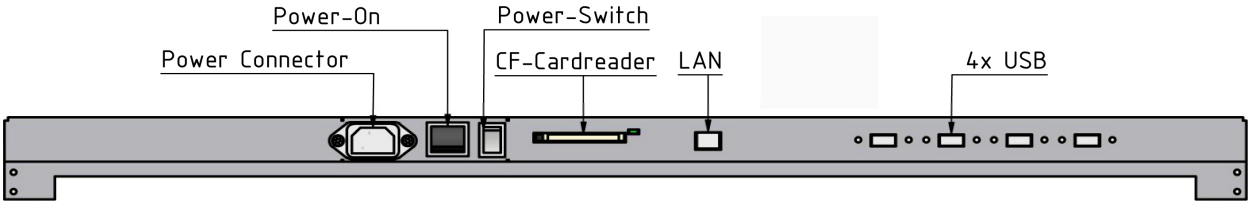

USB:	4 USB ports 1.1/2.0 high speed
LAN:	1 RJ45 LAN port 10/100/1000 Mbit
CF Card reader:	Optional

Position of connections

Landscape mode:	on the right side of the display (front view)
Portrait mode:	on the bottom of the display

Options

Glass:	Toughened safety glass, Anti-reflective coating, 4 mm - additional 5 mm overall depth
Touchscreen:	capacitive dual touch screen - additional 10 mm overall depth
Operating Systems:	Windows XP Embedded
	Windows XP Professional for embedded Systems
	Windows Embedded Standard 7
	Windows 7 Professional
	Windows 7 Ultimate
Compact Flash:	CF card reader
	CF card reader with 4 or 8GB Industrial Grade CF card

Power

Input AC Voltage:	100~240V, 50-60Hz
Brightness 50% (typ):	90W
Brightness 75% (typ):	160W
Brightness 100% (typ):	200W
Standby:	2W

Environmental Conditions

Temperature (in operation):	10°C ~ 40°C (10°C ~ 35°C protection glass)
	surrounding temperature has influence on the maximum brightness
Humidity (in operation):	10 ~ 80% (non-condensing)

Housing

Construction:	galvanised steel sheet frame construction
Size:	952,0 x 551,0 x 92,14 mm (H x V x D)
Weight:	15,5 kg
Ventilation:	passive cooling, without fans
Safety:	EN55022/ FCC class A, CE
Wall Mounting:	4x M5 Nut
	VESA Norm MIS-F, 600,400,8

DATA SHEET

DATA DISPLAY GROUP

Drawing

[redacted]

black areas = ventilation slots
4,5 diameter each

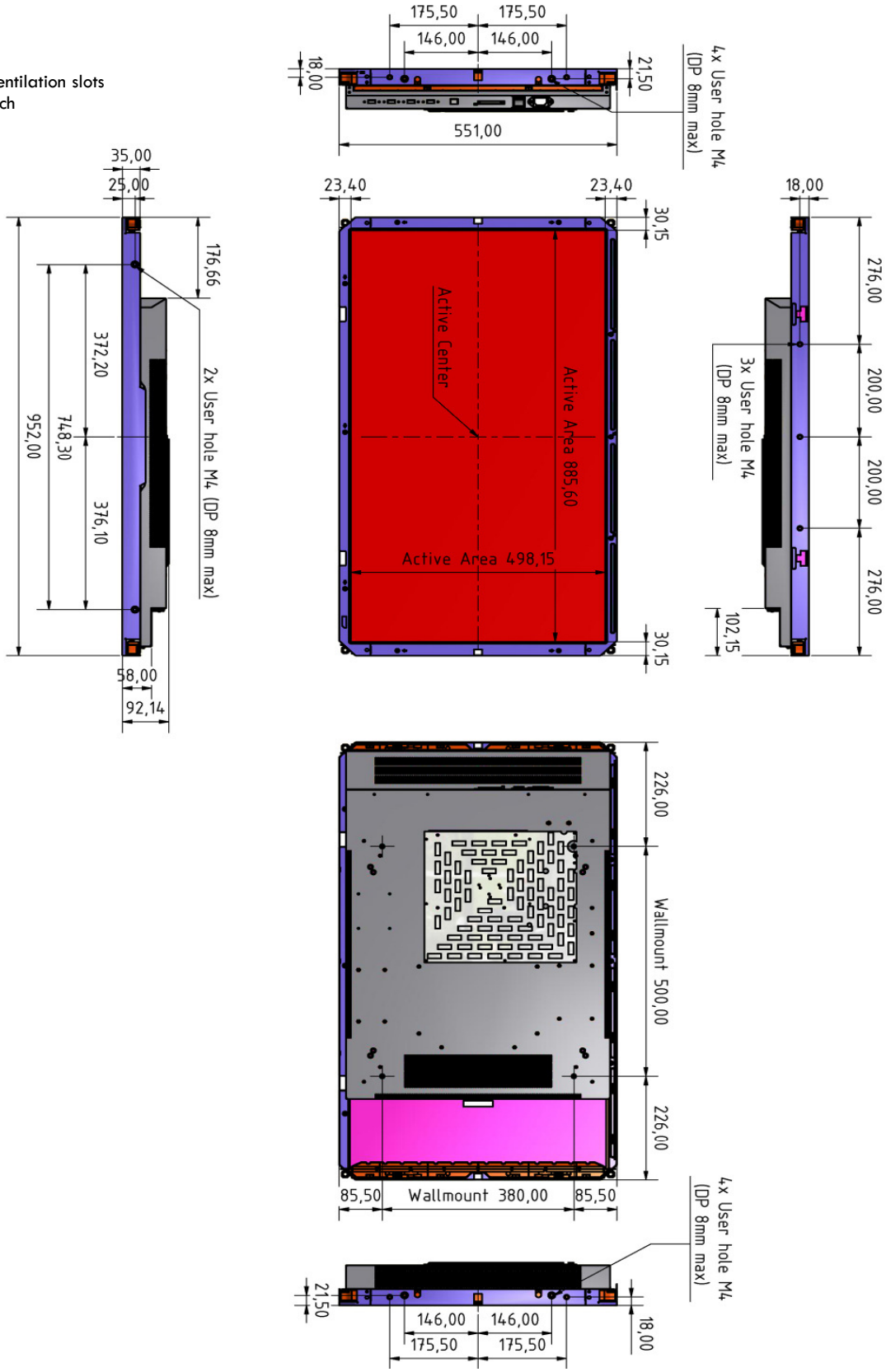

DATA SHEET

DATA DISPLAY GROUP

different mounting versions INLine 32-55 inch

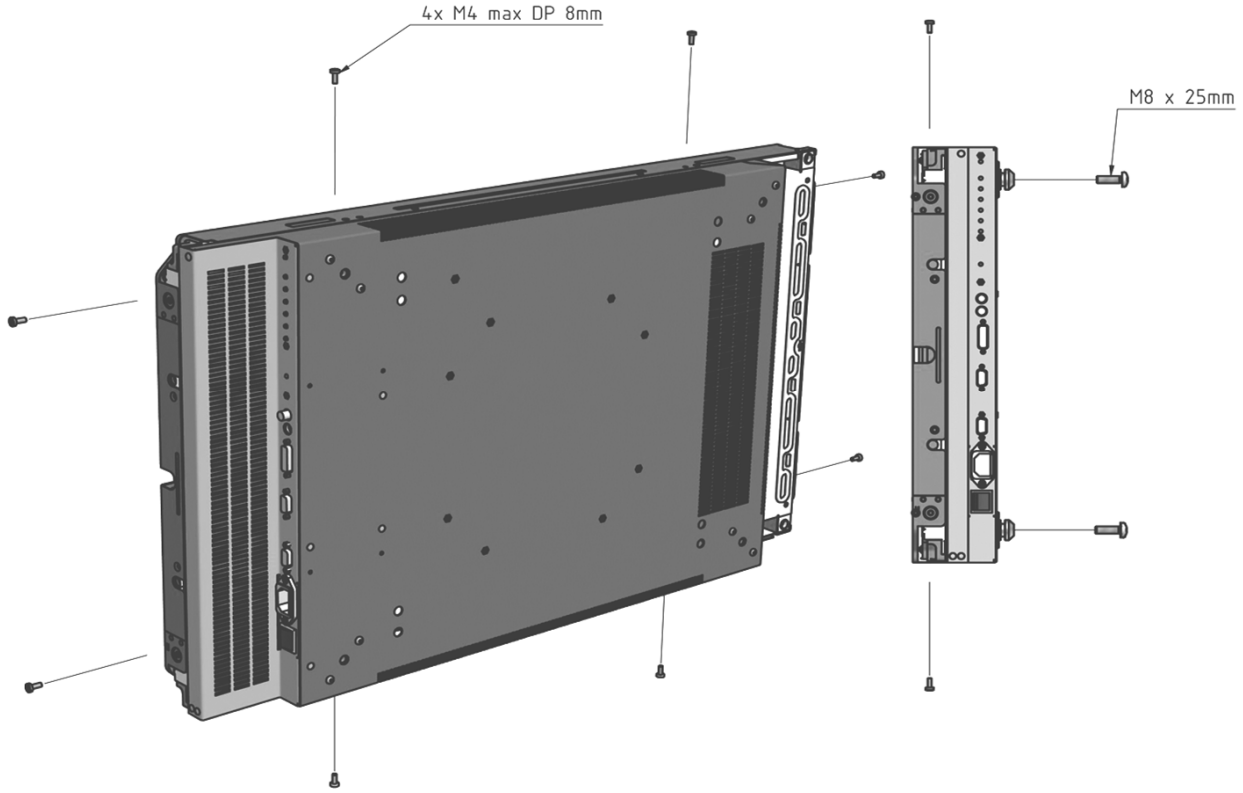

contact for information
Europe: info@dd-solution.de; +49 36 91 - 88 93 98-0
America: info@apollodisplays.com; +1 6 31 - 5 80 43 60
UK: info@displaytechnology.co.uk; +44 16 34 - 67 27 55
Turkey/ Near East: info@datadisplay.com.tr; +90 2 12 - 3 56 04 20
Italy: info@datadisplay.it; +39 0 49 - 7 24 00 38